International Journal of Innovative Research and Advanced Studies (IJIRAS)
Volume 3 Issue 4, April 2016

ISSN: 2394-4404

ZCT Precoded SLM Technique For PAPR Reduction In OFDM Systems Using Various Modulation Techniques

Savindervir Singh

Nithin Joseph Panicker

ECE, Lovely Professional University,
India

Abstract: ***Orthogonal frequency division multiplexing (OFDM) is the most spectrally efficient, robust transmission technique discovered so far for communication systems and it also mitigates the problem of multipath fading. High peak-to-average power ratio (PAPR) has always been a major drawback of the OFDM systems. In this article, a new precoding technique has been proposed based on Zadoff-Chu Matrix Transform (ZCT) and selective mapping (SLM) to reduce PAPR in OFDM systems. ZCT precoding having optimum correlation properties and having an ideal periodic autocorrelation and constant magnitude and thus reduces the autocorrelation of the input sequences while SLM takes an advantage of the fact that the PAPR is very sensitive to phase shifts of the signal. The main advantage of this proposed scheme is to achieve a significant reduction in PAPR without increasing the system complexity. Matlab simulations show that, the proposed method outperforms the existing precoding techniques without degrading the performance of the system.***

Keywords:-OFDM (Orthogonal Frequency Division Multiplexing), PAPR (Peak to Average Power Ratio), ZCT, FFT (Fast Fourier Transform), CCDF.

I. INTRODUCTION

Orthogonal frequency division multiplexing (OFDM) is a key technology for the present and future broadband wireless communication systems. OFDM is a technique in which digital data is encoded on carrier frequencies which are multiple in numbers.OFDM is broadband multicarrier modulation methods that have better-quality performance and profit over conventional modulation methods which are single-carrier because it is a superior fit with latest rapid data necessities along with action in the UHF plus microwave spectrum.

A. PRINCIPLES OF OFDM

Frequency Division Multiplexing (FDM) is a method where the central signal supposed to send must be fragmented to non-dependent signals, we may call it as subcarriers inside the regularity field. Thus, the original information stream is divided into numerous equivalent streams (or channels), one for each subcarrier. After that every subcarrier must required to modulate by conventional modulation.

FFT Logic: A fast Fourier transform is an efficient algorithm to compute the discrete Fourier transform (DFT) and it's inverse. This is applied to discrete data so the transforms are done by summing instead of integration. The Fast Fourier Transform is a representation used in computer codes.

The DFT is defined by the formula:

$$X[k] = \sum_{n=0}^{N-1} x[n] e^{-\frac{i2\pi kn}{N}}; \quad 0 \le k \le N-1 \qquad (1)$$

IFFT Logic*:* The inverse Fourier transform simply inverts the operation i.e. it converts from frequency domain back to time domain representation of the signal as:

$$\mathrm{x(n)} = \frac{1}{N}\sum_{k=0}^{N-1} X[k]\, e^{\frac{i2\pi kn}{N}}; \quad 0 \le n \le N-1 \qquad (2)$$

Twiddle Factor: A twiddle factor helpful in calculating, Fast Fourier Transform (FFT) algorithms is some invariable coefficients product along with data as it would require within impersonated algorithm. It is helpful in recursively unite lesser discrete of Fourier transforms and is defined as:

$$W_N = e^{\frac{-j2\pi}{N}} \qquad (3)$$

II. PEAK TO AVERAGE POWER RATIO (PAPR)

An OFDM having higher number of autonomously modulated sub-carriers the peak value of the method would be exceedingly high as compared to the average power of the method. The comparison of the peak power with respect to average power value is known as Peak-to-Average Power Ratio. This is very sensitive to non linearity of the high power amplifier maintained by same phase having peak value more than the average value using Coherent calculation [1,2,3]. The main drawbacks of system having a towering Peak-to-Average Power Ratio are-

- ✓ Comparatively higher intricacy in the analog system corresponding to digital and vice-versa in OFDM.
- ✓ Degrade the efficiency of RF amplifiers
- ✓ Degradation of BER performance

The Peak to Average Power Ratio of the broadcast signal is as:

$$PAPR = \frac{\max |x(t)|^2}{1/T\int_0^T |x(t)|^2\, dt} \qquad (4)$$

A. SELECTED MAPPING

The main purpose of this technique is to create data blocks which are in a set at the reception end; block having lower value is selected and further preceded with respect to the original signal which is to be transmitted. Different fragments of blocks carried the pure data but are divided in parts in order to get the traffic lower. Choosing the information chunk through various blocks in order to get short reduction value put together it apposite for communication. By doing, in above technique relay on forming a chunk of original information but separated by various pre-defined information lump at the teller end so which represent the original signal and then chose most favorable block among them for transmission [4,5,6,7].

We are assuming an OFDM system with N orthogonal sub – carriers. A data block is a vector X= $(x_n)_n$ is composed of N complex symbols x_n. Each symbol represent in the form of modulation symbol are transmitted over a sub – carrier. X is multiply by next ingredient component with U vector B_u= $(b_{u,n})_n$ composed of N complex numbers $b_{u,n}$, u∈{0,1……U-1}and each resulting vector X_u= $(x_{u,n})_n$ produces after IDFT, a corresponding OFDM signal given as:

$$S_u = \frac{1}{N}\sum_{n=0}^{N-1} x_{u,n}\, e^{j2\pi kn/N} \qquad (5)$$

Where *T* is duration under which OFDM having warning sign is already selected and 1/T is the sub – carrier spacing along with modified figures sets carrying lowly PAPR is preferred intended for communication along with total PAPR value reduced intended for SLM relay upon the amount of sequences U having same or different phases.

III. PROPOSED METHOD

PAPR reduction technique such as SLM with ZCT Pre-coding Matrix with the different modulation technique (QAM, QPSK, and BPSK) and achieve significant PAPR reduction.

Here, we are using ZCT (Zadoff-Chu matrix Transform) so one a critical challenge is that the phase factor information is required to be transmitted to the receiver as side information. Due to the side information, reduce the transmission efficiency and augmented computational complexity because several error in the detection of side information then the entire data blocked and could be damaged .So in this paper, we used error correcting codes prevent for damaging and blocking the data and also in ZCT there is no side information concept used[8,9,10].

PROCEDURE

- ✓ Analyze the OFDM system with SLM technique.
- ✓ Then analyze various modulation techniques like QAM, QPSK or BPSK.
- ✓ Then after that analyze PAPR reduction technique like SLM
- ✓ After take ZCT Transform and further helpful in calculating the PAPR & BER.
- ✓ Develop the problem based upon analysis.
- ✓ Obtain the output based result of the program.
- ✓ Analyze different result for different input parameters.

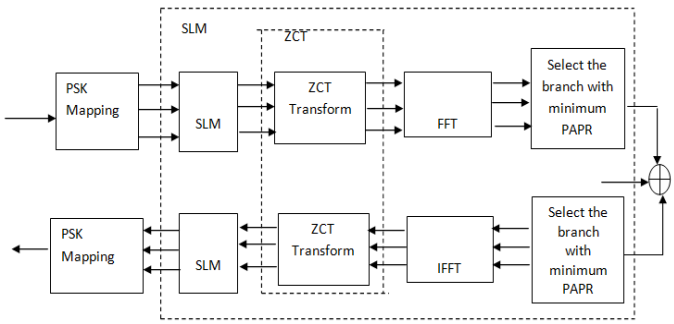

Figure 1: Block diagram of proposed work

IV. SIMULATION AND RESULT

In this section, various results of the methodology have been placed which are implemented in MATLAB Software.

ISSN: 2394-4404

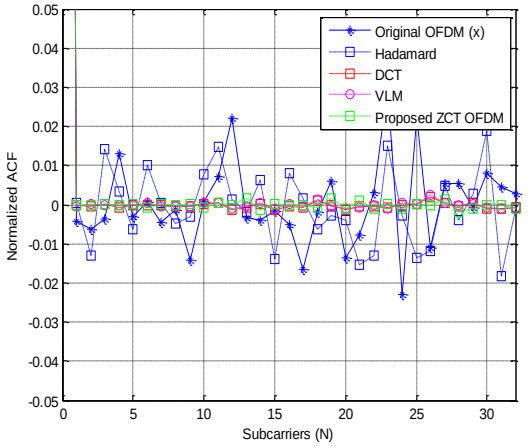

Figure 2: The original signal having normalized autocorrelation function, precoded with existing techniques and proposed ZCT technique, for N=32.

Result:-The autocorrelation function is very less fluctuating corresponding to another signal. It based on the fact that the function having the lower PAPR value will also have the lower auto-correlation value so helping in describing the fact that the there is also very useful for us to define that there is also very much important to produce the autocorrelation graph, so from the diagram that the it is clear that the ZCT has the significant advantage over the other precoding techniques.

✓ PAPR reduction performance estimate with the complementary cumulative distribution function (CCDF) of the PAPR using QPSK with SLM and ZCT.

RESULT: In case of QPSK Modulation Technique, there is a gain of 1 db of the VLM OFDM System.

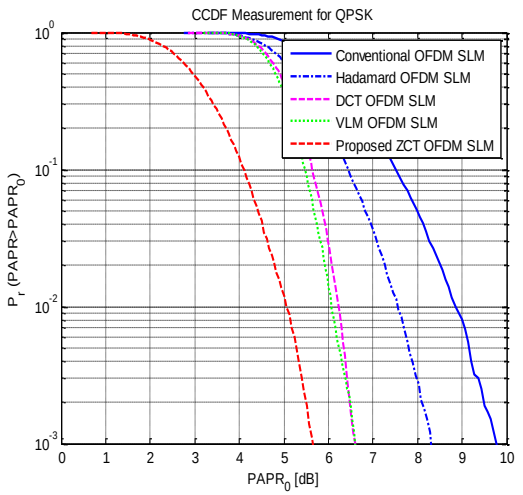

Figure 3: CCDF of PAPR with original signal and ZCT with SLM for QPSK OFDM

The gain of the Conventional OFDM SLM is 2.4db to that of the Hadamard OFDM SLM and 4.6db to that of the DCT OFDM SLM and also minutely better than that of the Proposed VLM OFDM SLM 4.7db as than that of original OFDM using SLM and having ZCT OFDM SLM which is further improvement in showing the 4.8 db as that of the other precoding techniques used here.

✓ PAPR reduction performance is calculated via the complementary cumulative distribution function (CCDF) of the PAPR using BPSK with SLM and ZCT.

RESULT: In the CCDF, the BPSK modulation there is a gain of 0.5db over the VLM OFDM System.

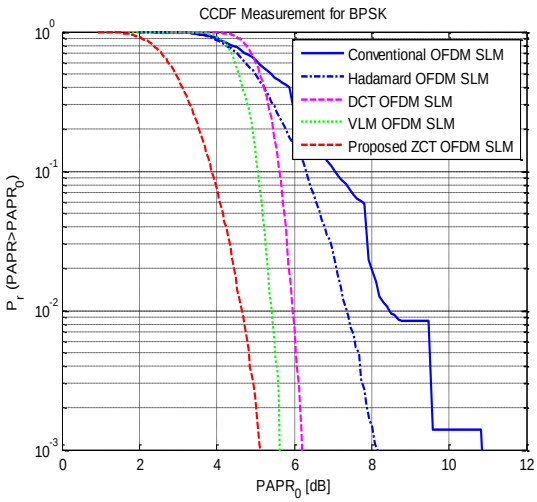

Figure 4: CCDF of PAPR with original signal and ZCT with SLM for BPSK OFDM

The gain of the Conventional OFDM SLM is 2.5db to that of the Hadamard OFDM SLM and 4.2db to that of the DCT OFDM SLM and also minutely better than that of VLM OFDM SLM 4.8db as than that of original OFDM using SLM and having ZCT OFDM SLM which is further improvement in showing the 6.1 db as that of the other precoding techniques used here.

✓ The PAPR reduction performance is calculate with the complementary cumulative distribution function (CCDF) of the PAPR using QAM with SLM and ZCT.
RESULT: In case of QAM Technique there is a gain of 0.5db than to that of the previous VLM precoding with SLM Technique.

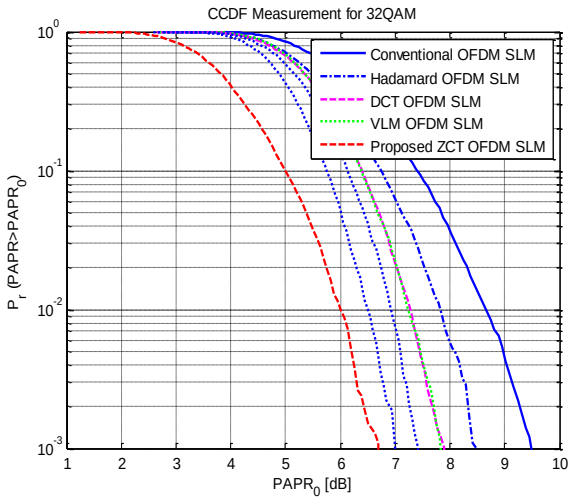

Figure 5: CCDF of PAPR with original signal and ZCT with SLM for QAM OFDM

The gain of the Conventional OFDM SLM is 1db to that of the Hadamard OFDM SLM and 2.5db to that of the DCT OFDM SLM and also minutely better than that of the

Proposed VLM OFDM SLM 2.7db as than that of original OFDM using SLM and having ZCT OFDM SLM which is further improvement in showing the 3.1 db as that of the other precoding techniques used here, we also use the concept of the various phase factors in QAM.

- ✓ To comparison the Bit Error Rate of the various signals i.e. Original, Hadamard, DCT, VLM and proposed ZCT.

  RESULT: The final output of the BER Performance is same as that of another OFDM precoding techniques or we can say that BER for ZCT is little bit lower in case of the other precoding techniques used.

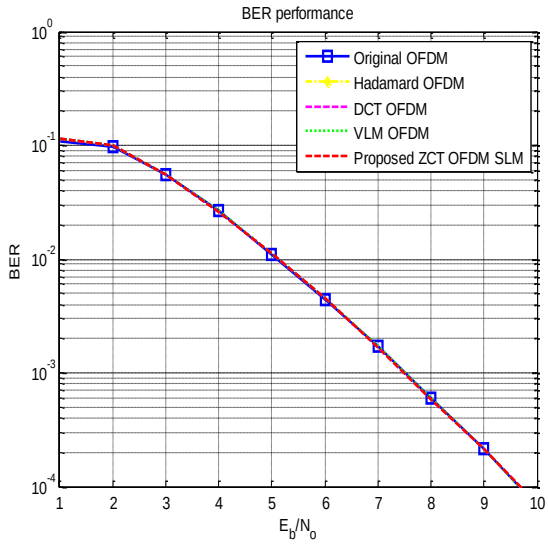

Figure 6: BER performance of OFDM systems along with conventional precoding schemes the proposed method i.e. ZCT Transform

V. CONCLUSION

Orthogonal frequency division multiplexing (OFDM) is an incredibly attractive technique for communications due to its spectrum effectiveness plus channel toughness. It has only single serious drawbacks in OFDM systems are that the composite transmit signal can put on view an extremely elevated peak power while the input series be exceedingly correlated. In the above mentioned technique, it has been proposed a ZCT precoding combining with SLM technique to decrease the high PAPR produce by multi carrier modulation in the OFDM defined systems. The PAPR reduction performances are evaluated by MATLAB simulation in terms of CCDF and BER. It was shown that proposed precoding method performs better than the conventional precoding techniques without mounting the complexity of the system or degrading the BER. Simulation results and mathematical analysis are given to support the statement.

REFERENCES

[1] Chang Eon Shin, Kyung Soo Rim, and Youngok Kim," A Weighted OFDM Signal Scheme for Peak--to-Average Power Ratio Reduction of OFDM Signals", IEEE Trans on Vechcular Technology, vol. 62, no. 3, March 2013,pp.1406-1409.

[2] Han, S. H., & Lee, J. H. (2005). An overview of peak-to-average power ratio reduction techniques for multicarrier transmission. IEEE Personal Communications, 12(2), 56–65.

[3] Jiang, T., & Wu, Y. (2008). An overview: Peak-to-average power ratio reduction techniques for OFDM signals. IEEE Transactions on Broadcasting, 54(2), 257–268.

[4] Md. Mahmuddul Hasan, "VLM precoded SLM Technique for PAPR Reduction in OFDM Systems", Springer Science+Business Media New York 2013, May 2013, pp.791-801.

[5] Eonpyo Hong, Hyunju Kim, Kyeongcheol Yang, Senior Member, IEEE, and Dongsoo Har ,"Pilot-Aided Side Information Detection in SLM-Based OFDM Systems", IEEE Trans. On Wireless. Comm,vol. 12,no. 7, July 2013, pp.3140-3147.

[6] Heo, S. J., Noh, H. S., No, J. S., & Shin, D. J. (2007). A modified SLM scheme with low complexity for PAPR reduction of OFDM systems. IEEE Transactions on Broadcasting, 53(4), 804–808.

[7] Bauml, R. W., Fisher, R. F. H., & Huber, J. B. (1996). Reducing the peak-to-average power ratio of multicarrier modulation by selected mapping. IEE Electronics Letters, 32(22), 2056–2057.

[8] Park, M., Heeyong, J., Cho, J., Cho, N., Hong, D., & Kang, C. (2000). PAPR Reduction in OFDM Transmission Using Hadamard Transform. In IEEE international conference on communications (Vol. 1,pp. 430–433).

[9] Slimane Ben Slimane, Member, IEEE," Reducing the Peak-to-Average Power Ratio of OFDM Signals Through Precoding", IEEE Trans on Vehicular Technology, vol. 56, no. 2, March 2012,pp.686-695.

[10] K.Muralibabu1, Dr.K.Rama Naidu, Dr. S.Padmanabhan, G.Praveenkumar,"PAPR Reduction using combined LDPC and DCT with Companding Transform in OFDM System", IEEE Wire. Comm., vol 3, Issue 12 (September 2012), pp. 33-38.